Crystal Clock Oscillator Specification
IQXO-616

ISSUE 3; July 2024

Description

- 32.768kHz output crystal oscillator in a ceramic package with a sealed metal lid and capable of operating over a wide supply voltage range.
- This device uses compensation of the frequency/temperature characteristics of a 32.768kHz crystal to provide superior stability performance while achieving an ultra low current draw.
- Applications:
  Real time clocks
  Smart meters
  IoT
  Wearable devices
  Precision timing devices
  Event data recorders

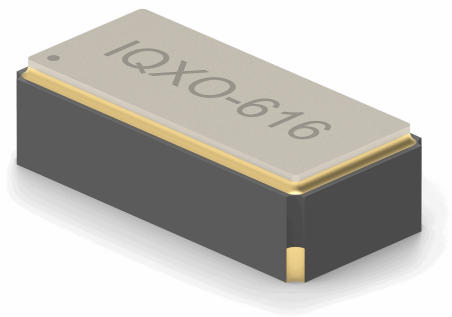

Frequency Parameters

- Frequency 32.768kHz
- Frequency Tolerance ±3.00ppm
- Frequency Stability ±50.00ppm
- Ageing ±3ppm max in 1st year (@ 25°C and Vs=3.3V)
- Frequency tolerance: (@ 25°C & Vs= 3.3V): ±3ppm max
  Frequency tolerance: (@ 25°C & Vs= 1.5V to 3.63V): ±5ppm max
- Supply Voltage Variation: ±1ppm/V max

Outline (mm)

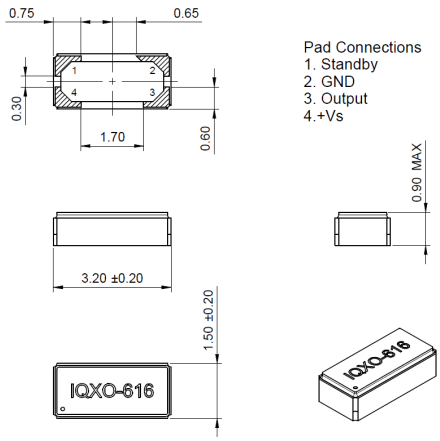

Electrical Parameters

- This device will operate with a supply voltage in the range of 1.3V to 3.63V, however the frequency stability condition is only achieved over a supply voltage range of 1.5V to 3.63V
- Supply Voltage: a power-on-clear circuit is built in to prevent unstable operation at power-on. To ensure power-on-clear operation, +Vs must be held at 0V for 0.5ms min and then started at <10ms/V.
  In order to shorten the oscillation start-up time, a boot circuit is built in to increase drive capability. The boot circuit operates for 500ms after oscillation starts. The frequency during boot circuit operation is not within ±3ppm tolerance.
- Current Draw (@ 3.3V and no load): 1.3µA typ, 2.5µA max

Recommended Solder Pad Layout

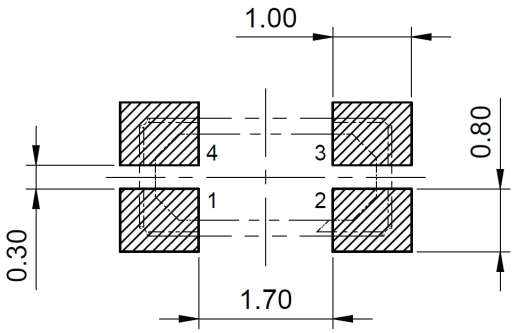

Operating Temperature Ranges

- -40 to 85°C

Output Details

- Output Compatibility CMOS
- Drive Capability 30pF max
- Output Low Vol: 10%Vs max
  Output High Voh: 90%Vs min
- Start-Up Time (@ 25°C and 3.3V): 0.5s max

Output Control

- Standby Control:
  Logic '1' (80%Vs min) to pad 1 enables oscillator output.
  Logic '0' (20%Vs max) to pad 1 disables oscillator output, output goes to high impedance state.
  Do not leave pad 1 unconnected.
  Standby current (@ Vs=1.8V & over -40+85°C): 2.0µA max

Sales Office Contact Details:

UK: +44 (0)1460 270200

Email: info@iqdfrequencyproducts.com
Web: www.iqdfrequencyproducts.com

Environmental Parameters

- Storage Temperature Range: –40 to 105°C
- Shock: 100g dummy dropped from a height of 1500mm onto concrete (3 directions, 10 times)
- Vibration: 1.5mm amplitude, frequency 10~60Hz, 2~3 minutes cycle in 3 perpendicular plains, 2 hours duration in each plain.

Manufacturing Details

- Note: please mount a ceramic-chip capacitor of 0.1μF min between +Vs and GND.
- RoHS Terminations — Au over Ni
- RoHS Reflow — 250°C±10°C for 10s±1s (2 times)

Ordering Information

- *Minimum ordering information required
  Frequency
  Model*
  Output
  Frequency Stability*
  Operating Temperature Range*
- Example
  32.768kHz IQXO-616
  CMOS ±50ppm -40 to 85C

Compliance

- RoHS Status (2015/863/EU) — Compliant
- REACh Status — Compliant
- MSL Rating (JDEC-STD-033): — Not Applicable

Packaging Details

- Tape & reel in accordance with EIA-481
  Quantities below the standard reel size to be supplied on cut tape

  Standard Pack Quantity: 3,000

Example Temperature Characteristics

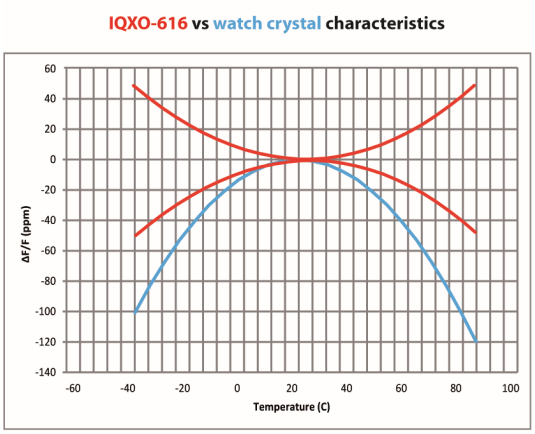

Sales Office Contact Details:
UK: +44 (0)1460 270200
Email: info@iqdfrequencyproducts.com
Web: www.iqdfrequencyproducts.com

Electrical Specification - maximum limiting values

Frequency Min	Temperature Range	Stability (Min)	Current Draw	Rise and Fall Time (10-90%)	Duty Cycle
	°C	ppm	mA	ns	%
32.768kHz	-40 to 85	±50.00	-	40	40/60%

This document was correct at the time of printing; please contact your local sales office for the latest version.
Click to view latest version on our website.

Sales Office Contact Details:
UK: +44 (0)1460 270200
Email: info@iqdfrequencyproducts.com
Web: www.iqdfrequencyproducts.com